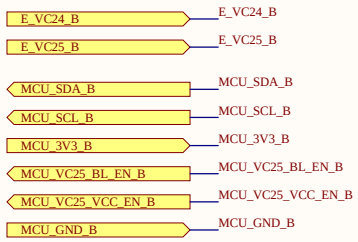

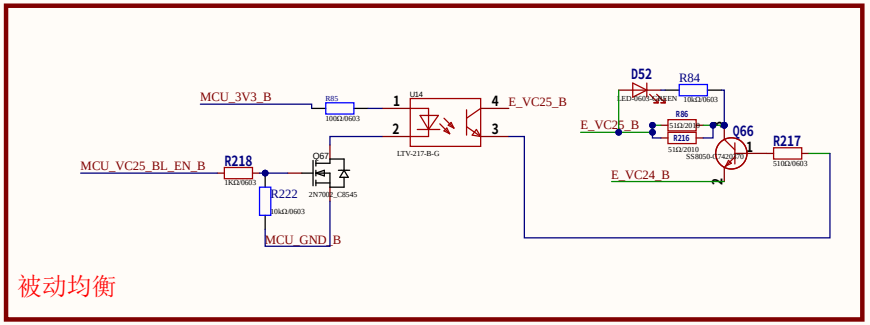

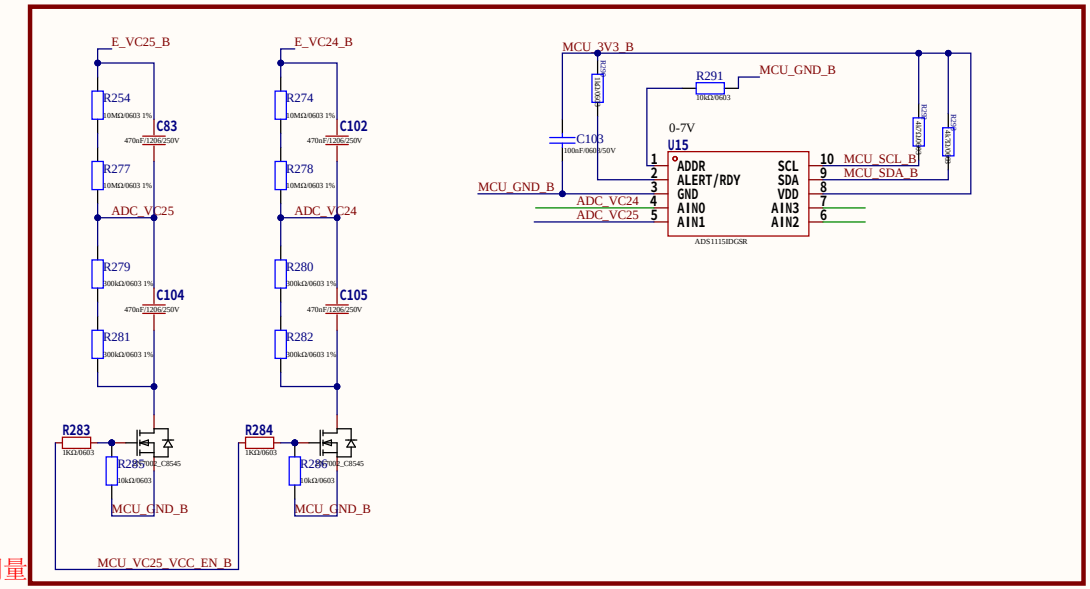

Title		
Size A3	Number	Revision
Date: 2/09/2026		Sheet of
File: F:\WPSCloud\..\01AFE_25_B.SchDoc		Drawn By: